RUBYFIRES®
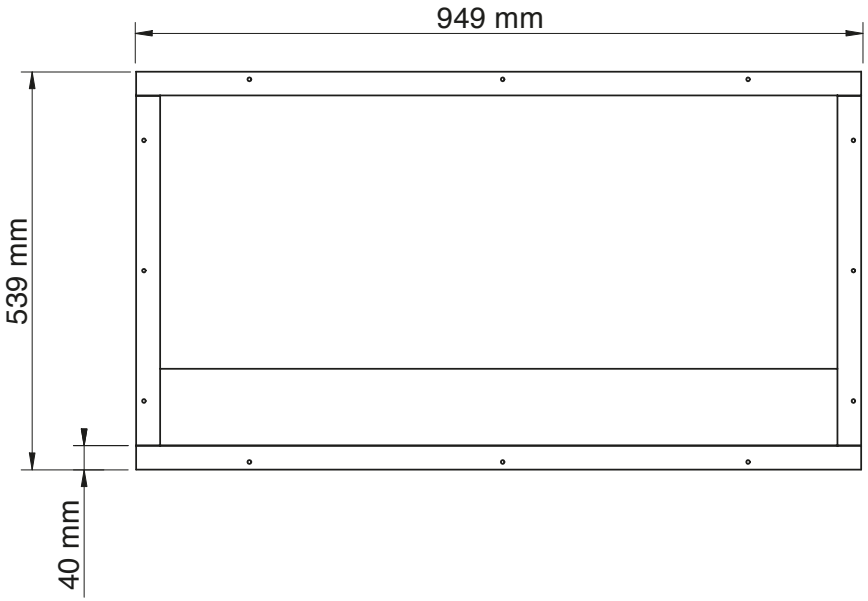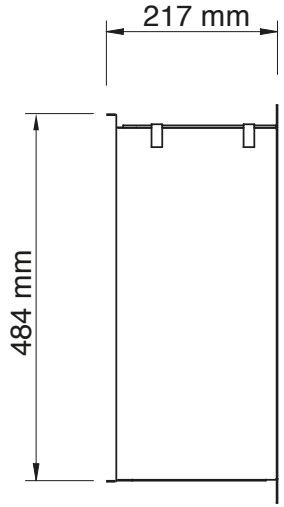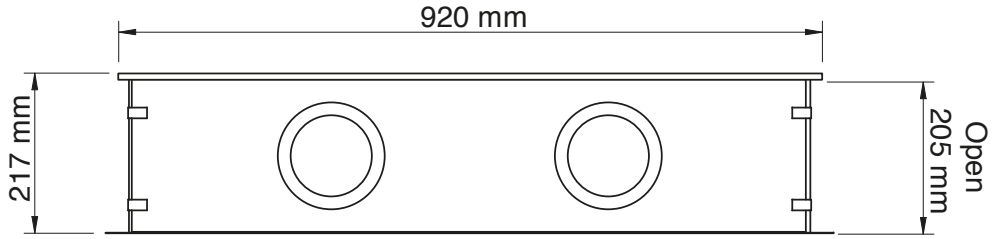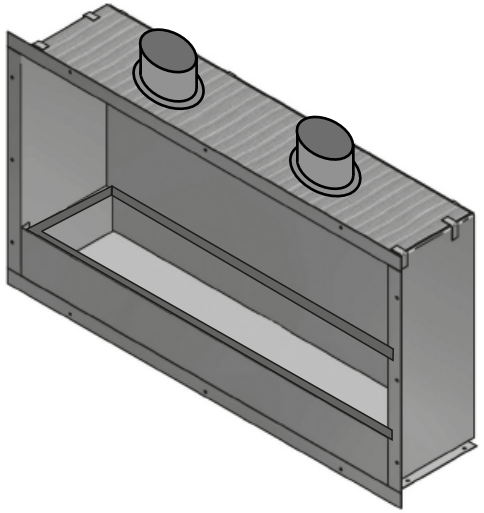
Built-in Unit XL